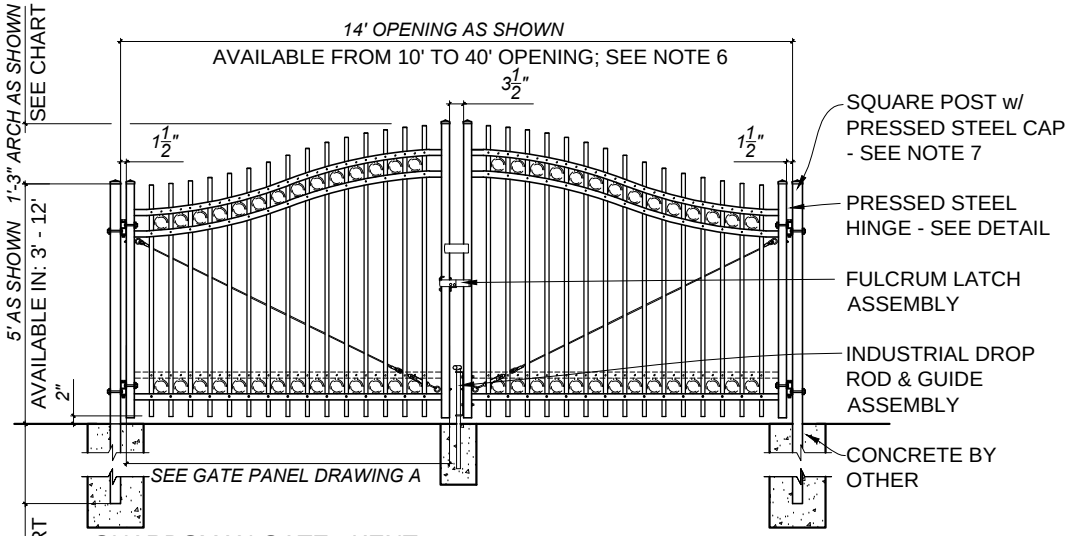

GUARDSMAN GATE - KENT
ELEVATION - OUTSIDE LOOKING IN 1/4"=1'-0"

POST DEPTH CHART*	
HEIGHT OF GATE	POST BELOW GRADE
5' OR LESS	2'
6' OR MORE	3'

* SEE NOTE 3 TO VERIFY

ARCH CHART	
WIDTH OF OPENING	HEIGHT OF ARCH
10'-14'	12"
14' AND UP	12" or 15"

NOTES:
1. SPECIFICATIONS SHOWN CAN BE CHANGED BY THE MANUFACTURER ONLY.
2. ALL COMPONENTS OF THE GATE TO BE COATED BLACK.
3. VERIFY POST DEPTH AND FOOTING DIMENSIONS WITH LOCAL CODES AND SITE CONDITIONS.
4. CUSTOM DIMENSIONS ARE AVAILABLE UPON REQUEST.
5. OUTSIDE LOOKING IN, GATE LATCHES IN THE MIDDLE
6. GATE OPENINGS OVER 16' WILL REQUIRE ADDITIONAL SUPPORT
7. POST SIZE WILL VARY DEPENDING UPON WIDTH AND HEIGHT OF GATE

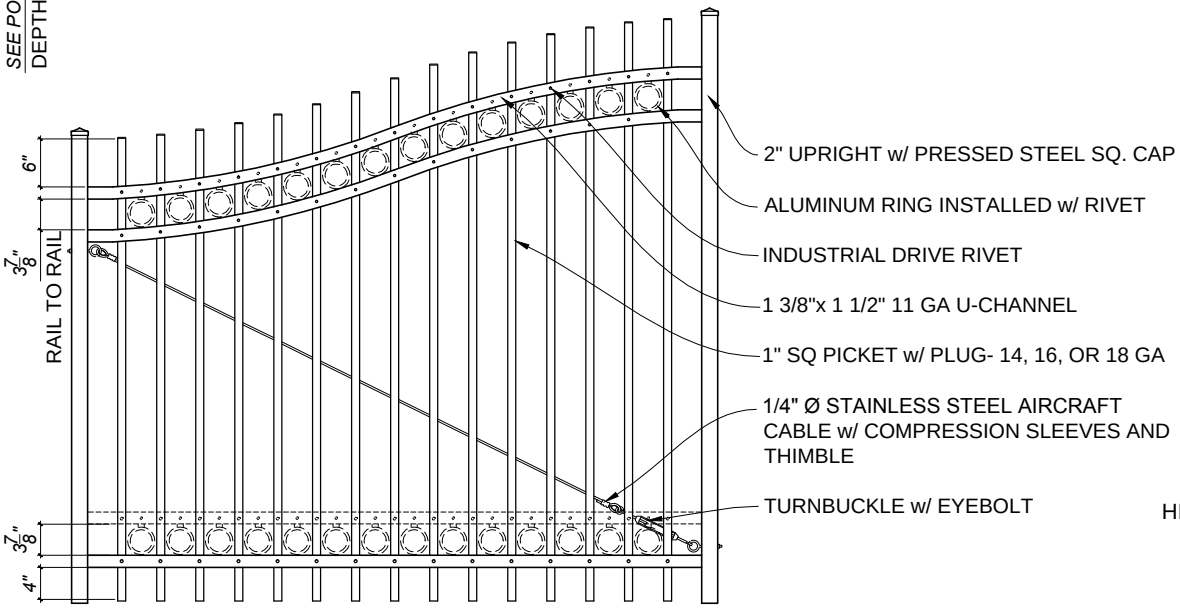

GUARDSMAN GATE - KENT
PANEL A ELEVATION 1/2"=1'-0"

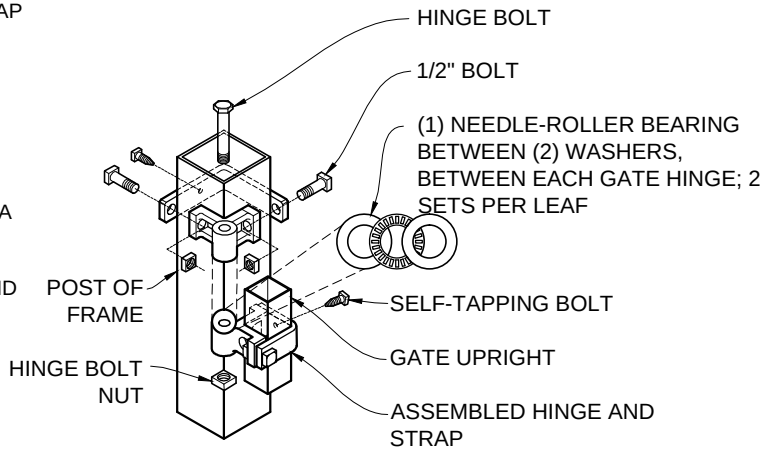

PRESSED STEEL SQUARE HINGE
DETAIL - NOT TO SCALE

COPYRIGHT © MERCHANTS METALS
ALL RIGHTS RESERVED

Merchants Metals®
the first name in fence solutions

GUARDSMAN GATE - KENT
DOUBLE DRIVE COMPOUND ARCH 3 TO 4 RAILS

10' TO 40' WIDE OPENING x 3' TO 12' HIGH
(Nom.Dimension)

BY: J.R.	DWG. NO. GM CA IND KN 5-20W x 3-12H DD
DATE: 16 SEPT 13	
REV: D.D.	SCALE: AS NOTED